1. How to wire one roll of LED strip light:

2. How to wire multiple LED strip light:

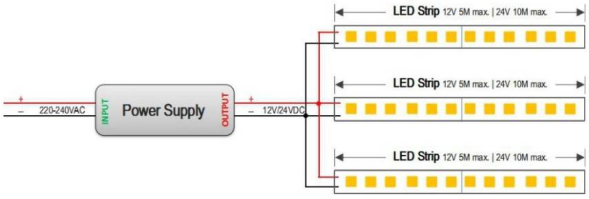

3.Wiring example for projects - 24VDC

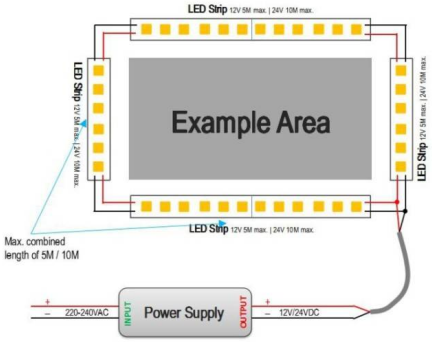

4. Wiring example for projects - Dimmable

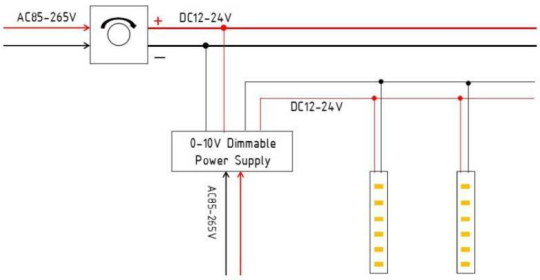
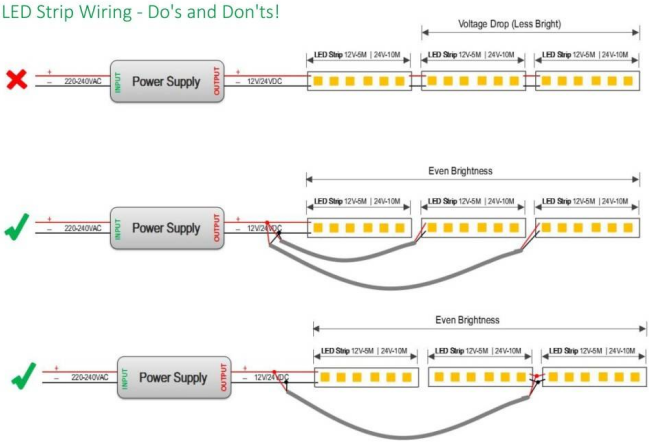
5. LED Strip Wiring - Do's and Don'ts!